FELSIC 125 FRS

CO 46 - CO 47

3 500 h / 125°C

16 V ... 350 V	220 µF ... 150 000 µF	Ø 36 (1,417) ... Ø 90 (3,543)	– 55°C + 125°C	Long Life Time

APPLICATIONS

- Power electronics: converters, current inverters
- Switch mode power supplies
- Magnetization, welding machines, flash
- Circuit with high impulse current

Fixing: Clip or stud fixing
Screw terminals: M5 or M6

Tolerance on capacitance at 20°C: –10 +30 %
Operating temperature : – 55°C +125°C

SCREW TERMINALS

BC

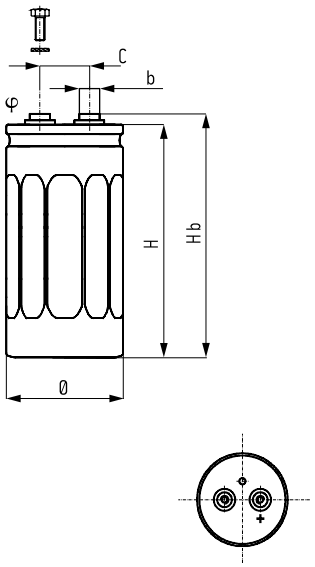

BD

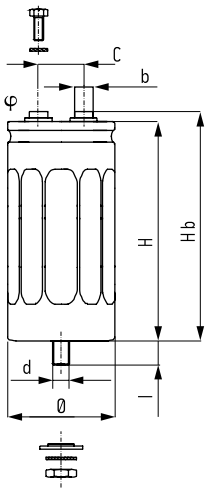

BC	BD
Insulated aluminum can	Aluminum can with sleeve
Hexagonal screws	Hexagonal screws
Spring washers	Spring washers
Fixing clip must be ordered separately	Stud fixing delivered with capacitor (steel hex nut, spring washer)

DIMENSIONS in mm (inches)

Ø ±1 (0,039)		H ±2 (0,079)		Hb ±2 (0,079)		C ±0,5 (0,020)		φ	b	
36	(1,417)	53	(2,087)	58	(2,283)	12,7	(0,500)	M5	8	(0,315)
36	(1,417)	81	(3,189)	86	(3,386)	12,7	(0,500)	M5	8	(0,315)
36	(1,417)	105	(4,134)	110	(4,331)	12,7	(0,500)	M5	8	(0,315)
51	(2,008)	82	(3,228)	87	(3,425)	22,2	(0,874)	M5	13	(0,512)
51	(2,008)	105	(4,134)	110	(4,331)	22,2	(0,874)	M5	13	(0,512)
66	(2,598)	105	(4,134)	110	(4,331)	28,5	(1,122)	M5	13	(0,512)
77	(3,031)	105	(4,134)	110	(4,331)	31,7	(1,248)	M5	13	(0,512)
77	(3,031)	145	(5,709)	150	(5,906)	31,7	(1,248)	M5	13	(0,512)
90	(3,543)	145	(5,709)	151	(5,945)	31,7	(1,248)	M6	13	(0,512)

Ø	d	l	Max. nut torque
36 (1,417)	M8	$12^{\pm 1}$ ($0{,}472^{\pm 0{,}472}$)	4 Nm
≥ 51 (2,008)	M12	$16^{\pm 1{,}5}$ ($0{,}630^{\pm 0{,}059}$)	10 Nm

HEXAGONAL SCREWS mm (inches)

Screwing height between screws and terminals:	3,5 (0,138) max
Max. screw torque:	M5: 3 Nm [x min 8 (0,315)] M6: 6 Nm [x min 10 (0,394)]

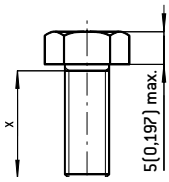

RESISTANCE TO VIBRATIONS

Hb mm (inches)	>150 (5,906)	≤150 (5,906)
f (Hz)	10 –55 Hz	10 - 2000 Hz
Amplitude	0,75 (0,030)	1,5 (0,059)
Acceleration	10 g - 98 m/s²	20 g - 196 m/s²
t (h)	3 x 2 h	3 x 2 h

SPECIFICATIONS

NFC 83 110 - Models CO 46, CO 47 - Long life
DIN 41 240 - Climatic category FKD – 55°C + 125°C / 56 days
CECC 30301-804 Issue 2
IEC 60 384.4 long life
Standard endurance test at U_R: 2000 h / 125°C

WITHSTAND STRENGTH OF INSULATING SLEEVE

Insulation resistance at 20°C between terminals and mounting hardware: 100 MΩ
Test voltage at 50 Hz 1 min. between terminals and mounting hardware: 3500 V
Fire resistance: self extinguish 30 s (IEC 60 695-2-2) without PVC

FELSIC 125 FRS

CO 46 - CO 47

3 500 h / 125°C

Capacitance	Can				ESR 100 Hz +20°C		Z 10 kHz +20°C max.	II +20°C 5 min max.	I ~ 100 Hz			Code	
	Ø		H		Typic	max.			+ 40°C max.	+85°C	+125°C	CO 47	CO 46
(µF)	mm (inches)		mm (inches)		(mΩ)	(mΩ)	(mΩ)	(mA)	(A)	(A)	(A)	(BC)	(BD)
Rated voltage 16 V													
10000	36	(1,417)	53	(2,087)	22	32	20	0,32	22	13	5,6	A 740200	A 741200
15000	36	(1,417)	81	(3,189)	18	26	16	0,48	22	17	7,5	A 740201	A 741201
22000	36	(1,417)	105	(4,134)	14	21	15	0,70	22	22	9,6	A 740202	A 741202
33000	51	(2,008)	82	(3,228)	12	18	12	1,05	25	25	11	A 740203	A 741203
47000	51	(2,008)	105	(4,134)	11	15	10	1,50	25	25	13	A 740204	A 741204
68000	66	(2,598)	105	(4,134)	10	14	10	2,18	50	35	15	A 740205	A 741205
100000	77	(3,031)	105	(4,134)	8	11	10	3,20	55	35	16	A 740206	A 741206
150000	77	(3,031)	145	(5,709)	7	10	9	4,80	55	41	20	A 740207	A 741207
Rated voltage 25 V													
4700	36	(1,417)	53	(2,087)	22	50	25	0,23	22	13	5,6	A 740220	A 741220
10000	36	(1,417)	81	(3,189)	18	28	20	0,50	22	17	7,5	A 740221	A 741221
15000	36	(1,417)	105	(4,134)	17	25	20	0,75	22	20	8,7	A 740222	A 741222
22000	51	(2,008)	82	(3,228)	13	20	15	1,10	25	25	10	A 740223	A 741223
33000	51	(2,008)	105	(4,134)	11	16	12	1,65	25	25	13	A 740224	A 741224
47000	66	(2,598)	105	(4,134)	10	14	12	2,35	50	37	15	A 740225	A 741225
68000	77	(3,031)	105	(4,134)	7	10	8	3,40	55	37	17	A 740226	A 741226
100000	77	(3,031)	145	(5,709)	7	10	8	5,00	55	41	20	A 740227	A 741227
Rated voltage 40 V													
4700	36	(1,417)	81	(3,189)	18	28	20	0,38	22	17	7,5	A 740241	A 741241
10000	36	(1,417)	105	(4,134)	17	25	17	0,80	22	20	8,7	A 740242	A 741242
15000	51	(2,008)	82	(3,228)	15	23	15	1,20	25	23	10	A 740243	A 741243
22000	51	(2,008)	105	(4,134)	11	17	12	1,76	25	25	13	A 740244	A 741244
33000	66	(2,598)	105	(4,134)	10	16	12	2,64	50	37	15	A 740245	A 741245
47000	77	(3,031)	105	(4,134)	7	10	10	3,76	55	37	17	A 740246	A 741246
68000	77	(3,031)	145	(5,709)	7	10	8	5,44	55	41	20	A 740247	A 741247
Rated voltage 63 V													
2200	36	(1,417)	53	(2,087)	36	54	40	0,27	20	10	4,4	A 740260	A 741260
3300	36	(1,417)	81	(3,189)	25	38	25	0,41	22	15	6,4	A 740261	A 741261
4700	36	(1,417)	105	(4,134)	22	32	22	0,59	22	18	7,6	A 740262	A 741262
6800	51	(2,008)	82	(3,228)	15	22	16	0,86	25	23	10	A 740263	A 741263
10000	51	(2,008)	105	(4,134)	11	16	11	1,26	25	25	13	A 740264	A 741264
15000	66	(2,598)	105	(4,134)	10	15	10	1,89	50	37	15	A 740265	A 741265
22000	77	(3,031)	105	(4,134)	7	11	8	2,77	55	37	16	A 740266	A 741266
33000	77	(3,031)	145	(5,709)	6	10	8	4,16	55	44	18	A 740267	A 741267
100000	90	(3,543)	145	(5,709)	4	10	8	10,00	80	65	24	A 740268	A 741268
Rated voltage 100 V													
1000	36	(1,417)	53	(2,087)	70	115	75	0,20	14	7,3	3,1	A 740280	A 741280
2200	36	(1,417)	81	(3,189)	40	60	40	0,44	22	12	5	A 740281	A 741281
3300	51	(2,008)	82	(3,228)	30	45	30	0,66	25	16	7,1	A 740283	A 741283
4700	51	(2,008)	105	(4,134)	27	40	24	0,94	25	19	8,4	A 740284	A 741284
6800	66	(2,598)	105	(4,134)	21	27	20	1,36	50	25	11	A 740285	A 741285
10000	77	(3,031)	105	(4,134)	14	21	15	2,00	55	29	13	A 740286	A 741286
15000	77	(3,031)	145	(5,709)	10	15	12	3,00	55	35	17	A 740287	A 741287
47000	90	(3,543)	145	(5,709)	4	10	8	9,00	80	65	24	A 740288	A 741288
Rated voltage 160 V													
470	36	(1,417)	53	(2,087)	120	180	100	0,15	9	5,2	2,1	A 740300	A 741300
680	36	(1,417)	81	(3,189)	70	105	50	0,21	14	8,3	3,3	A 740301	A 741301
1000	36	(1,417)	105	(4,134)	50	75	35	0,32	19	11	4,4	A 740302	A 741302
1500	51	(2,008)	82	(3,228)	45	65	30	0,48	23	12	5	A 740303	A 741303
2200	51	(2,008)	105	(4,134)	30	45	27	0,70	25	17	6,9	A 740304	A 741304
3300	66	(2,598)	105	(4,134)	25	35	21	1,05	42	21	8,7	A 740305	A 741305
4700	77	(3,031)	105	(4,134)	16	24	18	1,50	53	29	11	A 740306	A 741306
6800	77	(3,031)	145	(5,709)	12	18	12	2,18	55	39	15	A 740307	A 741307
22000	90	(3,543)	145	(5,709)	4	10	8	7,00	80	65	24	A 740308	A 741308

FELSIC 125 FRS

CO 46 - CO 47

3 500 h / 125°C

Capacitance	Can				ESR 100 Hz +20°C		Z 10 kHz +20°C max.	II +20°C 5 min max.	I ~ 100 Hz			Code	
	Ø		H		Typic	max.			+ 40°C max.	+85°C	+125°C	CO 47	CO 46
(µF)	mm (inches)		mm (inches)		(mΩ)	(mΩ)	(mΩ)	(mA)	(A)	(A)	(A)	(BC)	(BD)
Rated voltage 250 V													
220	36	(1,417)	53	(2,087)	150	230	135	0,11	5,6	4,8	1,9	A 740320	A 741320
330	36	(1,417)	81	(3,189)	95	140	85	0,16	9,2	7	2,8	A 740321	A 741321
470	36	(1,417)	105	(4,134)	70	105	62	0,23	11	9,3	3,7	A 740322	A 741322
680	51	(2,008)	82	(3,228)	60	90	60	0,34	17	11	4,3	A 740323	A 741323
1500	51	(2,008)	105	(4,134)	30	50	30	0,75	25	17	6,9	A 740324	A 741324
2200	66	(2,598)	105	(4,134)	30	45	24	1,13	37	20	7,9	A 740325	A 741325
3300	77	(3,031)	105	(4,134)	15	23	15	1,65	55	30	12	A 740326	A 741326
4700	77	(3,031)	145	(5,709)	10	15	11	2,35	55	34	14	A 740327	A 741327
10000	90	(3,543)	145	(5,709)	8	12	10	4,50	80	41	17	A 740328	A 741328
Rated voltage 350 V													
220	36	(1,417)	81	(3,189)	400	600	400	0,16	7	3,3	1,1	A 740340	A 741340
330	36	(1,417)	105	(4,134)	300	450	280	0,24	9	4,5	1,5	A 740341	A 741341
470	51	(2,008)	82	(3,228)	150	230	150	0,33	14	6,6	2,2	A 740342	A 741342
680	51	(2,008)	105	(4,134)	130	200	130	0,48	15	8,1	2,7	A 740343	A 741343
1000	51	(2,008)	105	(4,134)	80	120	80	0,70	19	10	3,4	A 740344	A 741344
1500	66	(2,598)	105	(4,134)	70	100	70	1,05	26	13	4,2	A 740345	A 741345
2200	77	(3,031)	105	(4,134)	40	60	40	1,50	37	18	6,1	A 740346	A 741346
3300	77	(3,031)	145	(5,709)	30	45	30	2,30	50	24	8,1	A 740347	A 741347
4700	90	(3,543)	145	(5,709)	15	25	20	3,30	78	39	13	A 740348	A 741348
6800	90	(3,543)	145	(5,709)	12	20	18	4,20	80	42	14	A 740349	A 741349

PEAK VOLTAGE (V)

1000 cycles, without ripple current
Up: Repetitive standard peak voltage (30 s)
Us: Repetitive surge voltage (0,1 s)

U_R	16 V	25 V	40 V	63 V	100 V	160 V	250 V	350 V
Up	18	29	46	72	115	184	288	385
Us						235	340	495

PERMISSIBLE RIPPLE CURRENT I (R.M.S. VALUE)

versus frequency ƒ:

ƒ(Hz)	50	100	300	600	1 000	10 000	50 000
I	0,8 x I~	I~	1,2 x I~	1,3 x I~	1,35 x I~	1,5 x I~	1,6 x I~

CONNECTIONS IN SERIES:

Operating voltages exceeding 500 V up to 20000 V w Ill be reached by connecting capacitors with rated voltages higher or equal to 350 V in series.

PERMISSIBLE REPETITIVE PEAK CURRENT Ip:

If given corresponding max r.m.s. currents are not exceed-ed, peak current values are as follows:

DIMENSIONS in mm (inches)				Ip	I~ max.
Ø		H		(A)	(A)
36	(1,417)	53	(2,087)	400	22
36	(1,417)	81	(3,189)	600	22
36	(1,417)	105	(4,134)	700	22
51	(2,008)	82	(3,228)	800	25
51	(2,008)	105	(4,134)	1100	25
66	(2,598)	105	(4,134)	1900	50
77	(3,031)	105	(4,134)	3100	55
77	(3,031)	145	(5,709)	4200	55
90	(3,543)	145	(5,709)	5700	80

FELSIC 125 FRS

CO 46 - CO 47

3 500 h / 125°C

EXPECTED LIFE

As a function of temperature and ripple current