ELECTROLYTIC ALUMINUM CAPACITORS

SNAPSIC HV

Muecap Bauelemente GmbH
Lochhamer Schlag 11 A, 82166 Gräfelfing
Tel. 089 / 89 80 81-0, Fax: 089 / 854 31 61
info@muecap.de, www.muecap.de

8 000 h / 105°C

160 V ... 500 V	47 µF ... 2200 µF	Ø 22 (0,866) ... Ø 35 (1,378)	– 55°C + 105°C	Long Life Time

APPLICATIONS

- For solid PC board mounting
- Switch mode power supplies
- Impulse current

Fixing: Printed SNAP-IN pins

Tolerance on capacitance at 20°C : ± 20 %
Operating temperature : – 55°C + 105°C

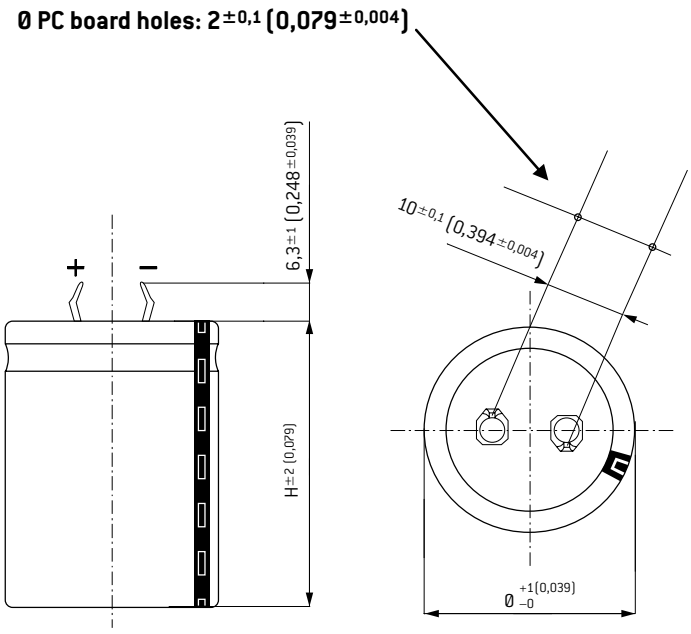

Dimensions in mm (inches)

Standard pins can be replaced by 4,5 (0,177) max pins on request

DIMENSIONS in mm (inches)

Can size	Ø		H	
1	22	(0,866)	25	(0,984)
2	22	(0,866)	30	(1,181)
3	22	(0,866)	40	(1,575)
4*	25	(0,984)	25	(0,984)
5	25	(0,984)	30	(1,181)
6	25	(0,984)	40	(1,575)
7	25	(0,984)	50	(1,969)
8*	30	(1,181)	25	(0,984)
9	30	(1,181)	30	(1,181)
10	30	(1,181)	35	(1,378)
11	30	(1,181)	40	(1,575)
12*	30	(1,181)	45	(1,772)
13*	30	(1,181)	50	(1,969)
14	35	(1,378)	30	(1,181)
15	35	(1,378)	35	(1,378)
16	35	(1,378)	40	(1,575)
17*	35	(1,378)	45	(1,772)
18	35	(1,378)	50	(1,969)

* Out of range

RESISTANCE TO VIBRATIONS

	Standard
f (Hz)	10 - 500 Hz
Amplitude	0,75 (0,030)
Acceleration	10 g - 98 m/s²
t (h)	3 x 10 sweep cycles

SPECIFICATIONS

CECC 30300 - Long life
DIN 41 240 - Climatic category – 55°C + 105°C / 56 days
IEC 60 384.4 Long life
Standard endurance test at U_R: 2000 h / 105°C

WITHSTAND STRENGTH OF INSULATING SLEEVE

Insulation resistance at 20°C between pins and mounting hardware: 100 MΩ
Test voltage at 50 Hz 1 min. between terminals and mounting hardware: 2000 V
Fire resistance: self extinguish 30 s (IEC 60 695-2-2) without PVC

SNAP IN

SNAPSIC HV

Muecap Bauelemente GmbH
Lochhamer Schlag 11 A, 82166 Gräfelfing
Tel. 089 / 89 80 81-0, Fax: 089 / 854 31 61
info@muecap.de, www.muecap.de

8 000 h / 105°C

Capacitance (µF)	Dimensions Ø mm (inches)		Dimensions H mm (inches)		Can size	Tanδ 100 Hz +20°C max. (%)	ESR 100 Hz +20°C Typic (mΩ)	Z 10 kHz +20°C Typic (mΩ)	II +20°C 5 min. max. (mA)	I ~ 100 Hz +40°C max. (A)	I ~ 100 Hz +105°C max. (A)	Code
Rated voltage / Peak voltage: 160/185 V												
220	22	(0,866)	25	(0,984)	1	10	500	300	0,21	3	0,8	A 716020
330	22	(0,866)	30	(1,181)	2	10	300	200	0,32	4,2	1,1	A 716021
470	25	(0,984)	30	(1,181)	5	10	200	130	0,45	5,5	1,5	A 716024
680	25	(0,984)	40	(1,575)	6	10	150	110	0,66	7,1	1,9	A 716025
1000	30	(1,181)	35	(1,378)	10	10	100	70	0,96	9,2	2,5	A 716027
1500	35	(1,378)	40	(1,575)	16	12	80	60	1,4	12	3,2	A 716031
2200	35	(1,378)	50	(1,969)	18	13	60	40	2,1	15	4	A 716032
Rated voltage / Peak voltage: 200/230 V												
150	22	(0,866)	25	(0,984)	1	9	600	350	0,18	2,7	0,7	A 716040
220	22	(0,866)	30	(1,181)	2	9	400	250	0,26	3,6	1	A 716041
330	25	(0,984)	30	(1,181)	5	7	200	130	0,39	5,5	1,5	A 716044
470	25	(0,984)	40	(1,575)	6	7	140	80	0,56	7,4	2	A 716045
560	30	(1,181)	30	(1,181)	9	8	150	100	0,67	7,1	1,9	A 716046
680	35	(1,378)	30	(1,181)	14	10	150	100	0,81	7,7	2,1	A 716049
1000	35	(1,378)	35	(1,378)	15	12	120	70	1,2	9,2	2,5	A 716050
1500	35	(1,378)	40	(1,575)	16	10	70	50	1,8	12	3,4	A 716051
2200	35	(1,378)	50	(1,969)	18	12	55	40	2,6	15	4,2	A 716052
Rated voltage / Peak voltage: 250/290 V												
150	22	(0,866)	25	(0,984)	1	8	600	330	0,22	2,7	0,7	A 716060
220	22	(0,866)	30	(1,181)	2	8	400	220	0,33	3,6	1	A 716061
330	25	(0,984)	30	(1,181)	5	8	180	110	0,5	5,8	1,5	A 716064
470	30	(1,181)	30	(1,181)	9	8	150	120	0,7	7,1	1,9	A 716066
680	30	(1,181)	40	(1,575)	11	8	130	95	1	8,5	2,3	A 716068
1000	35	(1,378)	40	(1,575)	16	9	90	60	1,5	12	3	A 716071
1500	35	(1,378)	50	(1,969)	18	10	70	45	2,3	14	3,7	A 716072
Rated voltage / Peak voltage: 400/450 V												
68	22	(0,866)	30	(1,181)	2	6	600	320	0,65	2,9	0,8	A 716101
100	22	(0,866)	30	(1,181)	2	6	500	250	0,8	3,2	0,9	A 716102
150	22	(0,866)	40	(1,575)	3	6	400	210	1	4,1	1,1	A 716103
220	25	(0,984)	40	(1,575)	6	6	340	190	1,2	4,7	1,3	A 716105
220	30	(1,181)	35	(1,378)	10	8	400	280	1,2	3,8	1	A 716106
330	25	(0,984)	50	(1,969)	7	6	200	100	1,5	6,8	1,8	A 716107
330	30	(1,181)	40	(1,575)	11	6	220	120	1,5	6,6	1,7	A 716108
470	35	(1,378)	40	(1,575)	16	6	150	100	1,8	8,7	2,3	A 716111
560	35	(1,378)	50	(1,969)	18	6	120	90	1,9	11	2,8	A 716112
Rated voltage / Peak voltage: 450/500 V												
47	22	(0,866)	30	(1,181)	2	6	800	410	0,6	2,5	0,7	A 716121
68	22	(0,866)	30	(1,181)	2	6	600	320	0,7	2,9	0,8	A 716122
100	22	(0,866)	40	(1,575)	3	6	500	260	0,8	3,3	1	A 716123
150	25	(0,984)	40	(1,575)	6	6	380	230	1	4,5	1,2	A 716125
220	30	(1,181)	40	(1,575)	11	6	280	170	1,25	5,8	1,5	A 716128
220	35	(1,378)	30	(1,181)	14	6	300	190	1,25	5,5	1,5	A 716129
330	35	(1,378)	40	(1,575)	16	6	200	130	1,5	7,5	2	A 716131
470	35	(1,378)	50	(1,969)	18	6	150	120	1,8	8,9	2,5	A 716132
Rated voltage / Peak voltage: 500/550 V												
47	22	(0,866)	30	(1,181)	2	6	1200	750	0,62	2,1	0,6	A 716141
100	25	(0,984)	40	(1,575)	6	6	650	440	0,9	3,4	0,9	A 716145
150	25	(0,984)	50	(1,969)	7	6	290	190	1,1	5,7	1,5	A 716147
150	30	(1,181)	40	(1,575)	11	6	320	210	1,1	5,4	1,4	A 716148
180	35	(1,378)	30	(1,181)	14	6	300	250	1,2	5,5	1,5	A 716149
220	35	(1,378)	40	(1,575)	16	6	260	170	1,35	6,6	1,8	A 716151
330	35	(1,378)	50	(1,969)	18	8	200	160	1,6	8	2,2	A 716153

SNAPSIC HV

Muecap Bauelemente GmbH
Lochhamer Schlag 11 A, 82166 Gräfelfing
Tel. 089 / 89 80 81-0, Fax: 089 / 854 31 61
info@muecap.de, www.muecap.de

8 000 h / 105°C

EXPECTED LIFE

as a function of temperature and ripple current

PERMISSIBLE RIPPLE CURRENT I (R.M.S. VALUE)

versus frequency ƒ:
I ~: permissible r.m.s. current at 100 Hz

ƒ(Hz)	50	100	300	600	1 000	10 000	≥ 50 000
I	0,8 x I~	I~	1,2 x I~	1,3 x I~	1,35 x I~	1,5 x I~	1,6 x I~

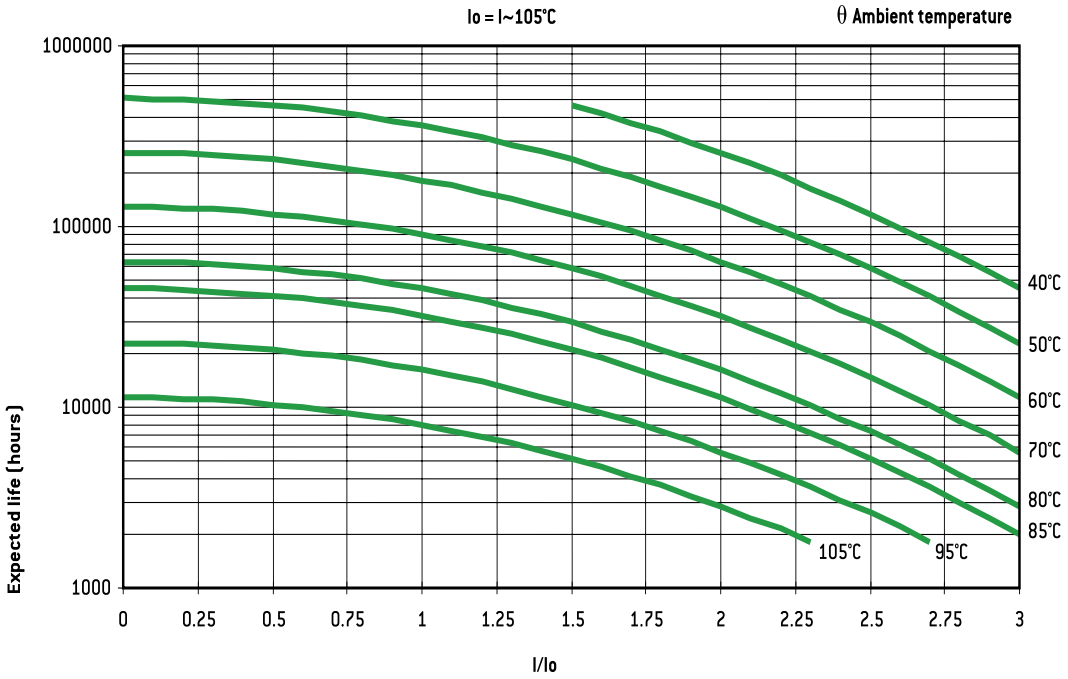

SNAP IN